Introduction to Reconfigurable FPGA I/O Modules

Acromag FPGA modules offer a flexible and powerful solution for application-specific functions with intensive computation requirements.

Why FPGAs?

Next Generation I/O

Your I/O needs are unique, but often you don't have the time or financial resources to develop a custom board to meet your exact requirements. Off-the-shelf boards might be able to handle the I/O, however they rarely have the intelligence to process the data without assistance from another board. So what are you to do?

Well, now you don't have to compromise. Acromag's newest I/O modules allow you to implement your own application-specific logic routines. An embedded DSP-capable Field Programmable Gate Array (FPGA) chip has user-customizable logic which allows you to install your own code for controlling the I/O functions. Acromag FPGA I/O modules can help you complete your projects on time, on budget, and without any loss in system performance.

Custom I/O on Standard Hardware

Acromag offers several FPGA-equipped boards in a variety of configurations with a choice of TTL, RS422, or LVDS I/O lines. Each I/O format is available with either a 500K or 2M-gate reconfigurable FPGA to match your logic requirements. Download your program code into the FPGA and you have a custom I/O board in a fraction of the time and cost it would take to build your own.

Typical Applications

Although there is no limit to the capabilities of Acromag's FPGA I/O boards, several applications are ideal for the new technology. Common uses include:

Hardware Simulation – Testing the hardware interface of equipment prior to development to ensure proper operation of all system capabilities.

Hardware-In-The Loop Simulation – Monitor and/or control communications between two hardware devices under test.

In-Circuit Diagnostics – Monitor for fault conditions and run diagnostic tests while in-circuit. New diagnostic routines can be quickly downloaded based on the fault condition. Store multiple routines in flash memory.

Communication Protocols – Design high-speed communication protocols to match legacy or specialized communication requirements.

You can program the FPGA for recipe-based response to input stimulus or to function as a high-speed communication processor. Embedded multipliers make fast work of computation-intensive algorithms for signal preprocessing without involving the CPU or an external DSP board. And with extensive logic resources, the FPGA is excellent for waveform generation, pulse measurement, or custom serial interfaces.

Core Attributes

Xilinx® Virtex®-II FPGA

At the core of Acromag's new PMC modules is the Xilinx Virtex-II, the most advanced FPGA for programmable logic applications. This component features versatile logic resources, deep on-chip memory, and a high-speed interface. You can run faster logic internally with buffered routing and enjoy the power of advanced clock management options for precise timing control.

- Up to 2 million system gates
- Up to 1Mb of on-chip block RAM
- Up to 56 18 x 18 embedded multipliers (Up to 0.5 Tera MACs)
- Up to 12 digital clock managers (16 global clocks)

PCI Bus Interface

A PLX® PCI 9056 device handles all aspects of system connectivity to provide a high-performance interface to the PCI bus. This component enables a 32-bit 66MHz interface with dual-channel DMA support.

Download via FPGA or Flash Memory

Your application code is downloadable directly into the FPGA or through the use of the on-board flash memory. Embedding code into flash memory provides added security to preserve your program for consistent operation. Or, you can reprogram the FPGA on the fly to perform different operations as conditions change based on instructions received from the host computer.

Memory

Two memory sources provide data buffers both inside and outside of the FPGA. You can access up to 1Mb of configurable block RAM within the FPGA for high-speed data transfers. A 256K x 36-bit SRAM device also provides additional memory capacity.

I/O Capabilities

Several models are available giving you a choice of I/O formats. Each module has plenty of I/O channels ready to be controlled by the FPGA.

- TTL I/O
- RS422 I/O
- TTL/RS422 combo
- LVDS I/O

Block Diagram

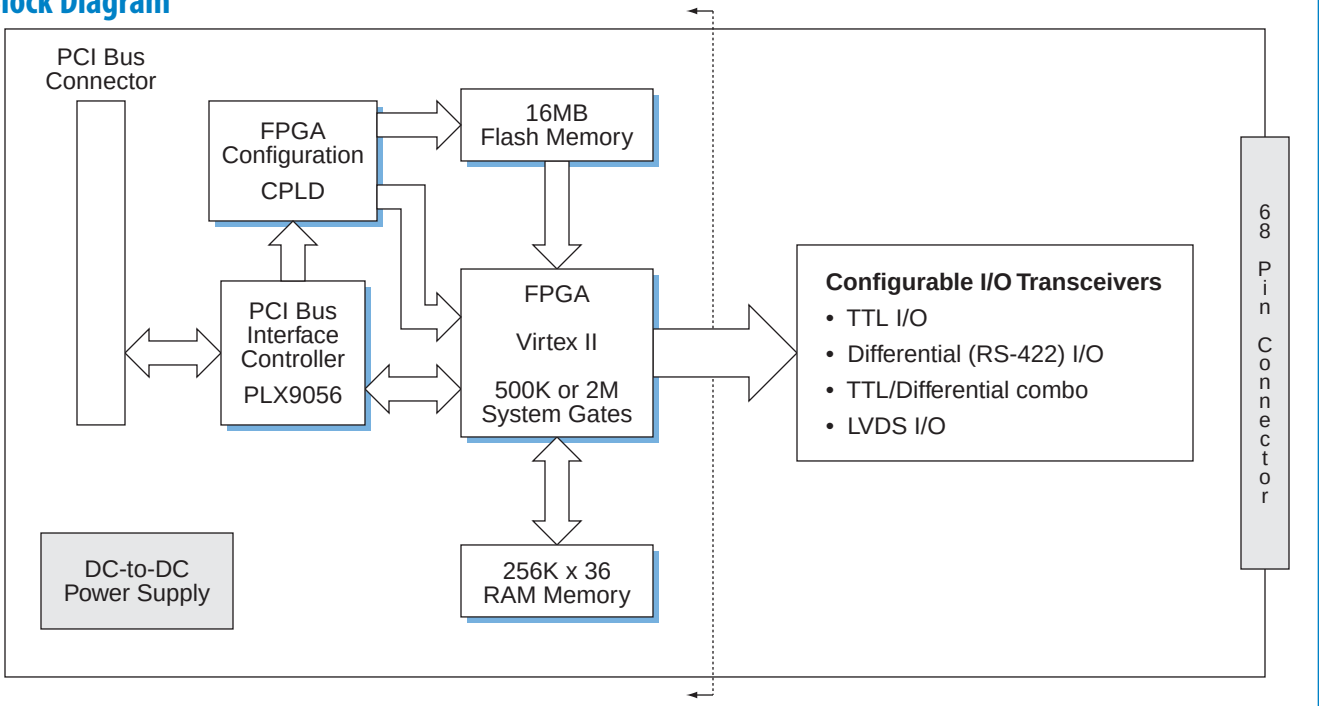

Engineering Design Kit

This kit provides you with the basic information required to develop a custom FPGA program for download to the Xilinx FPGA. Utilities help you load VHDL into the FPGA, and to establish DMA transfers between the FPGA and the CPU. It is also recommended that users should be familiar with Xilinx development tools.

Acromag's Engineering Design Kit includes:

- Parts list and location
- Schematics
- Compiled FPGA file
- Example VHDL code provided as selectable blocks of code

  Local Bus – example interface between PLX PCI9056 and FPGA

  SRAM – example code for read and write transfers to SRAM

  Interrupts – examples of change-of-state monitoring and interrupts to the PCI bus

  Field I/O – examples of direction control and I/O read/write capability

  Pin definitions – configuration file containing definition of all user I/O pins communicating with the FPGA

Module Selection Chart

PMC Module	I/O Type	Logic Capacity	Page No.
PMC-DX501	TTL I/O	500K system gates	Page 56
PMC-DX2001	TTL I/O	2M system gates	56
PMC-DX502	Differential I/O	500K system gates	57
PMC-DX2002	Differential I/O	2M system gates	57
PMC-DX503	Differential I/O and TTL I/O	500K system gates	58
PMC-DX2003	Differential I/O and TTL I/O	2M system gates	58
PMC-DX504	LVDS I/O	500K system gates	59
PMC-DX2004	LVDS I/O	2M system gates	59